Systec V-100 / V-120 / V-150

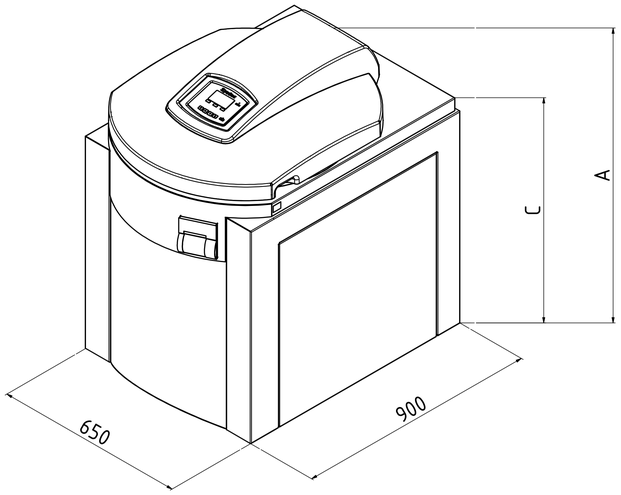

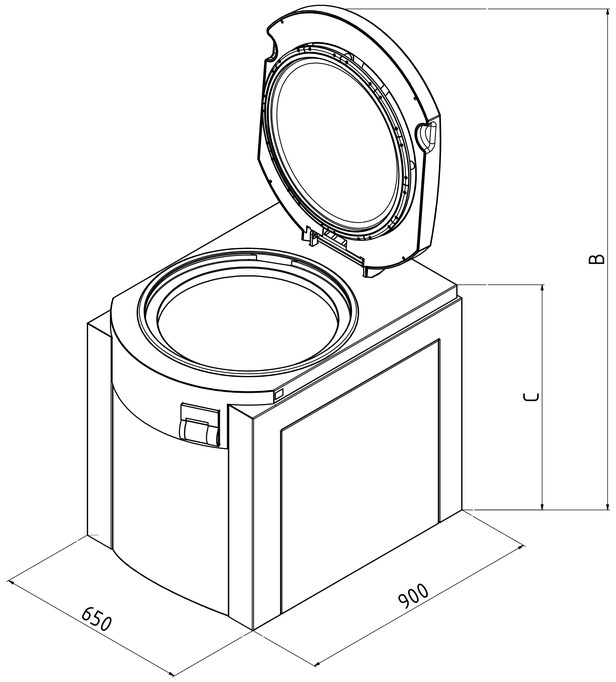

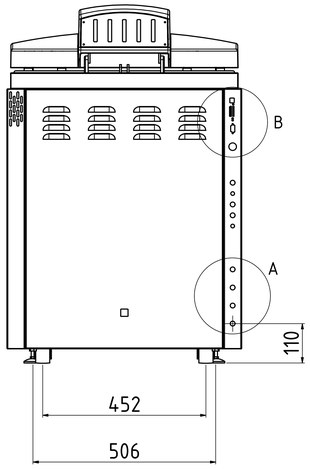

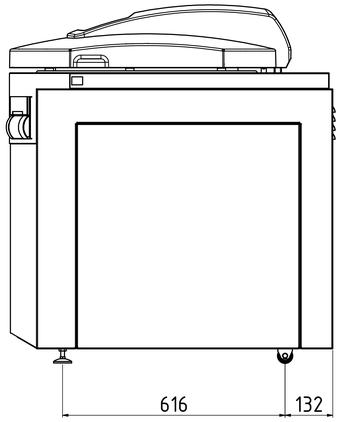

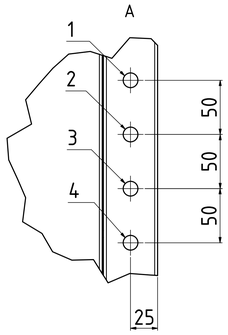

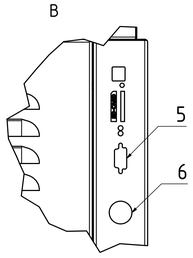

Technical data						
No.	Description	Size	DX	DE	DB	Comments
1	Compressed air	NW 7,2	O	O	--	min. 3-10bar / 50l/min., ≤ Class 4 according to DIN ISO 8573, Only with "water cooling with support pressure"
2	Demineralized water*	3/4" ET	X	X	--	≥ 1bar water pressure Σ alkaline earth ions < 0,02 mmol/l, conductivity: 0,1 - 15 µS/cm
3	Tap water*	3/4" ET	X	X	--	≥ 1bar water pressure Σ alkaline earth ions ≤ 2,0 mmol/l, conductivity max. 300 µS/cm, 11°dH, 200mg/l CaCO3
4	Drain	3/4" ET	X	X	X	Systec VX and Systec VE Temperature-resistant installation (103°C in case of failure) Temperature is controlled at 70°C (setable) Systec VB Temperature-resistant installation up to 103°C No controlled temperature, Drain height max. ≤ 40cm above the floor
5	Interface		X	X	--	RS-232 / RS-485 (Ethernet Network and USB compatible)
6	Power supply*		X	X	X	1x400V+N+PE / 50-50Hz / 16 Ampere / CEE socket

	Art.No.: VX	Art.No.: VE	Art.No.: VB	A	B	C	Heat emission	Net weight	Test weight*[2]
Systec V-100	1100	1300	1450	985	1580	800	<700 Watt/h	175 kg	285 kg
Systec V-120	1120	1320	1460	985	1580	800	<750 Watt/h	180 kg	310 kg
Systec V-150	1150	1350	1470	1115	1710	930	<800 Watt/h	190 kg	350 kg

X = Standard O = Optional -- = Not Available Lenght dimensions in mm

* Other media connections available on request

*[2] Other voltages and single-phase available on reqiest

*[3] Test weight: chamber completely filled with water for pressure test

Allgemein-toleranz ISO 2768 TH-m	Oberfläche	Maßstab:		Gewicht:	
		Werkstoff: Bemerkung:			
Datum	Name				
Gezeichnet 14.05.2014	Zizka	Systec V-Ø500			
Kontrolliert					
Norm					
Systec the autoclave company		Zng.-Nr.: AZ 1100 EN		Rev.: 1	1 / A0
Status	Änderungen	Datum	Name		